SHOXS
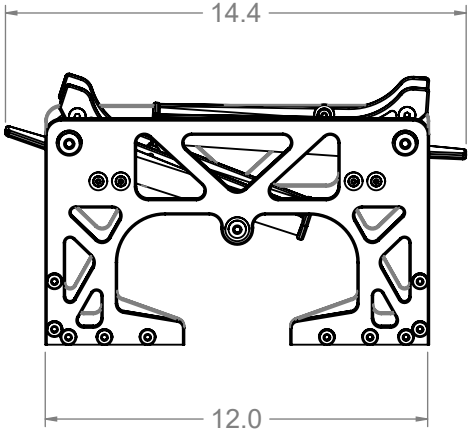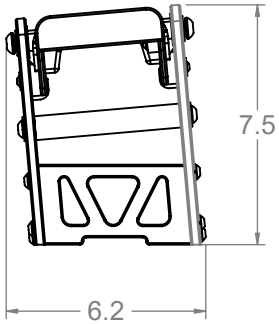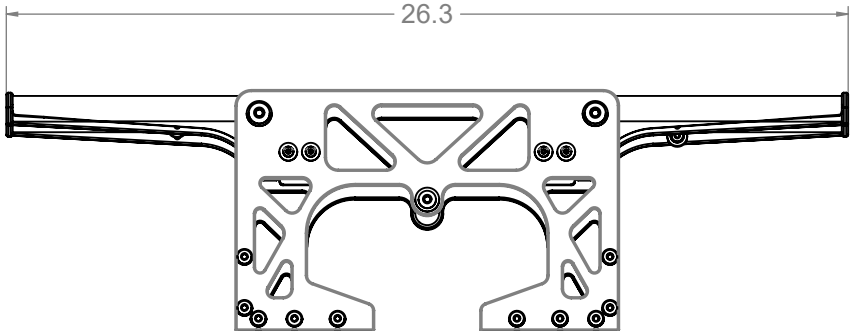
SHOXS.COM/1005